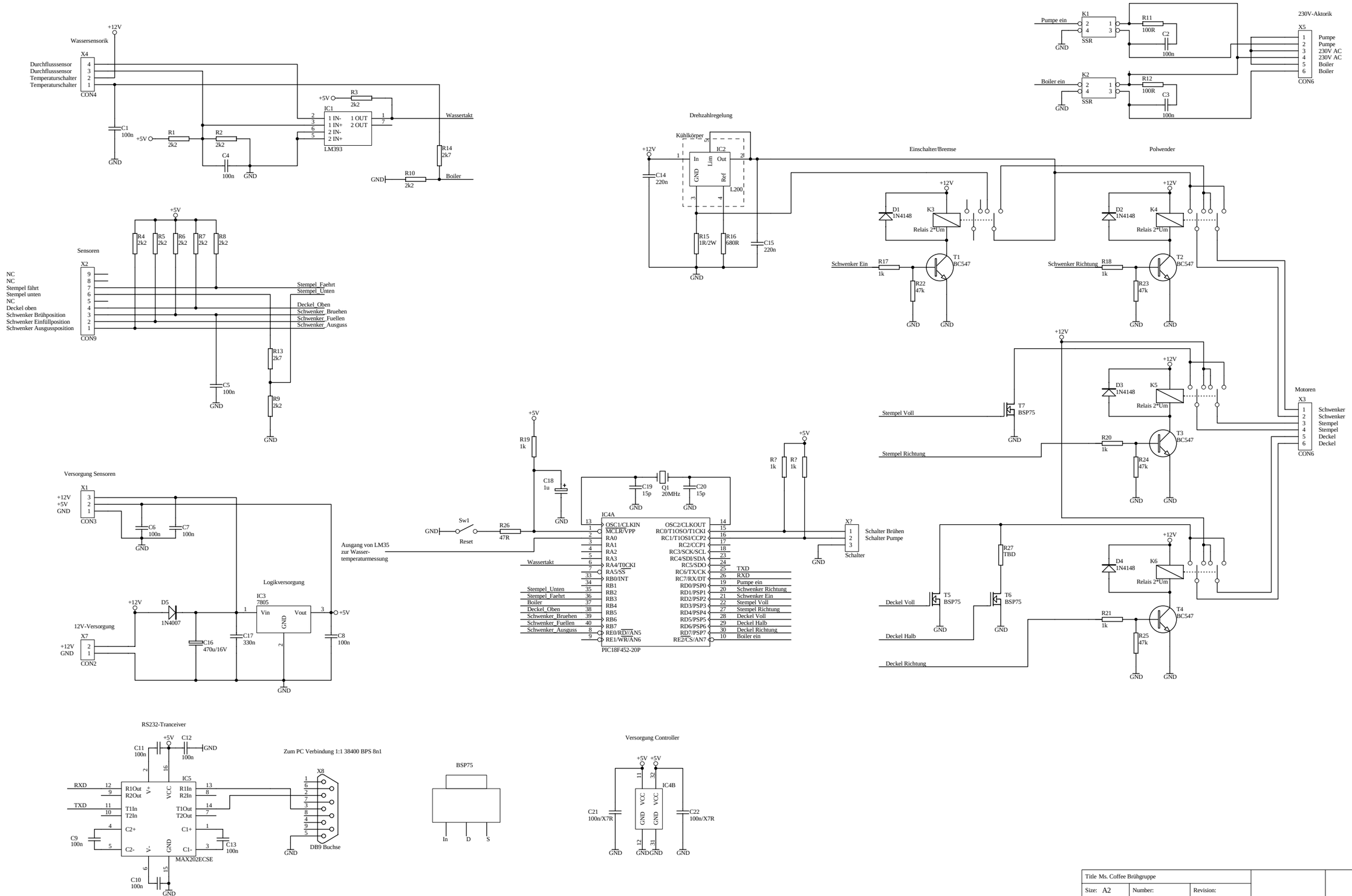

Title Ms. Coffee Brühgruppe			
Size: A2	Number:	Revision:	
Date: 3-Sep-2004	Time: 20:57:43	Sheet1 of 1	
File: C:\Daten\bunker\Projekt\Hardware\kaffee.ddb - Documents\Brueher.Sch			