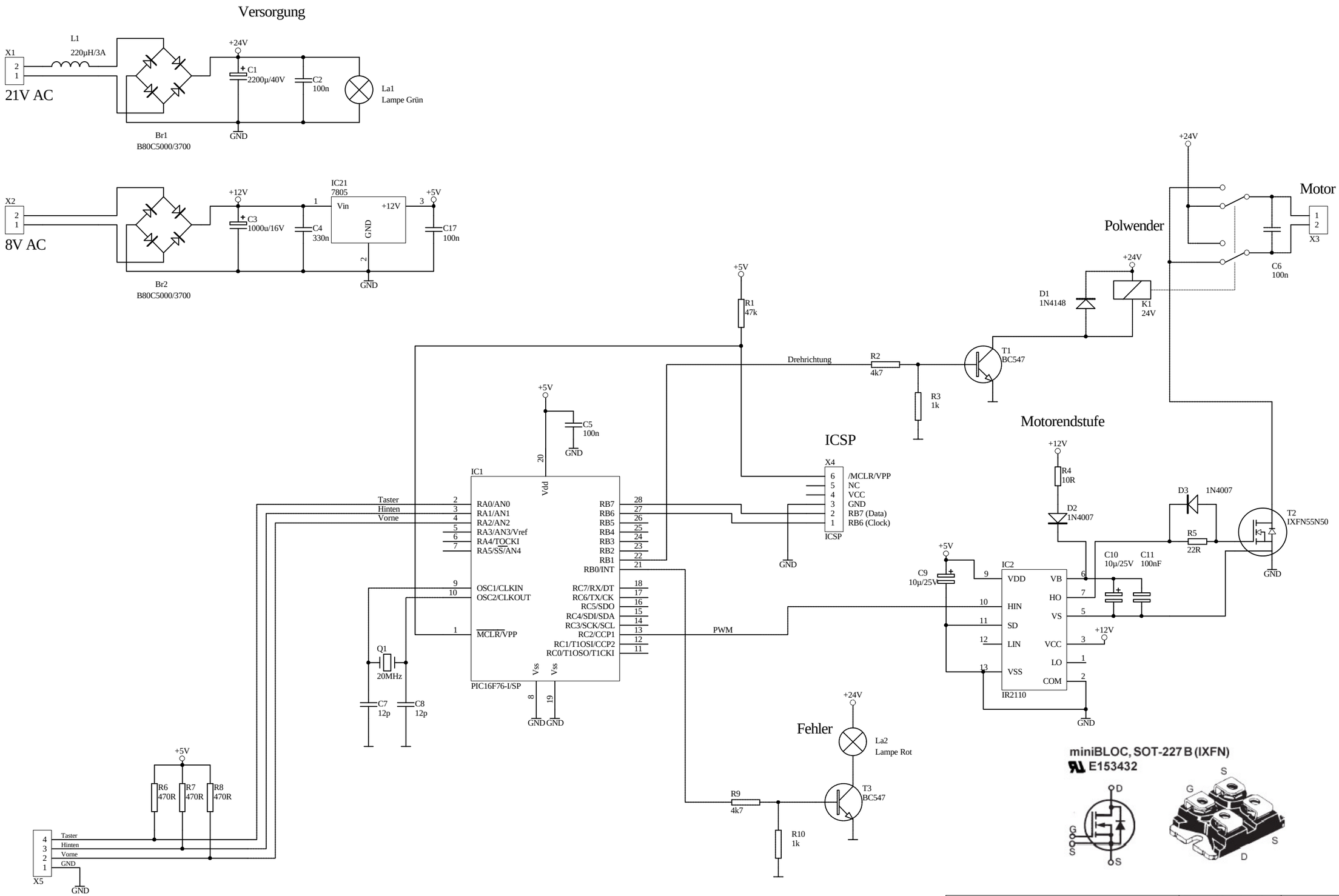

Title	Wohlfühlmaschine II		*Fingers elektrische Welt*
Size: A3	Number:	Revision:	
Date: 7-Mar-2005	Time: 08:32:52	Sheet1 of 1	
File: D:\wohlf\Wohlfühler.ddb - Documents\Wohlfühler.sch			

Protel. Making Electronic Design Easy™