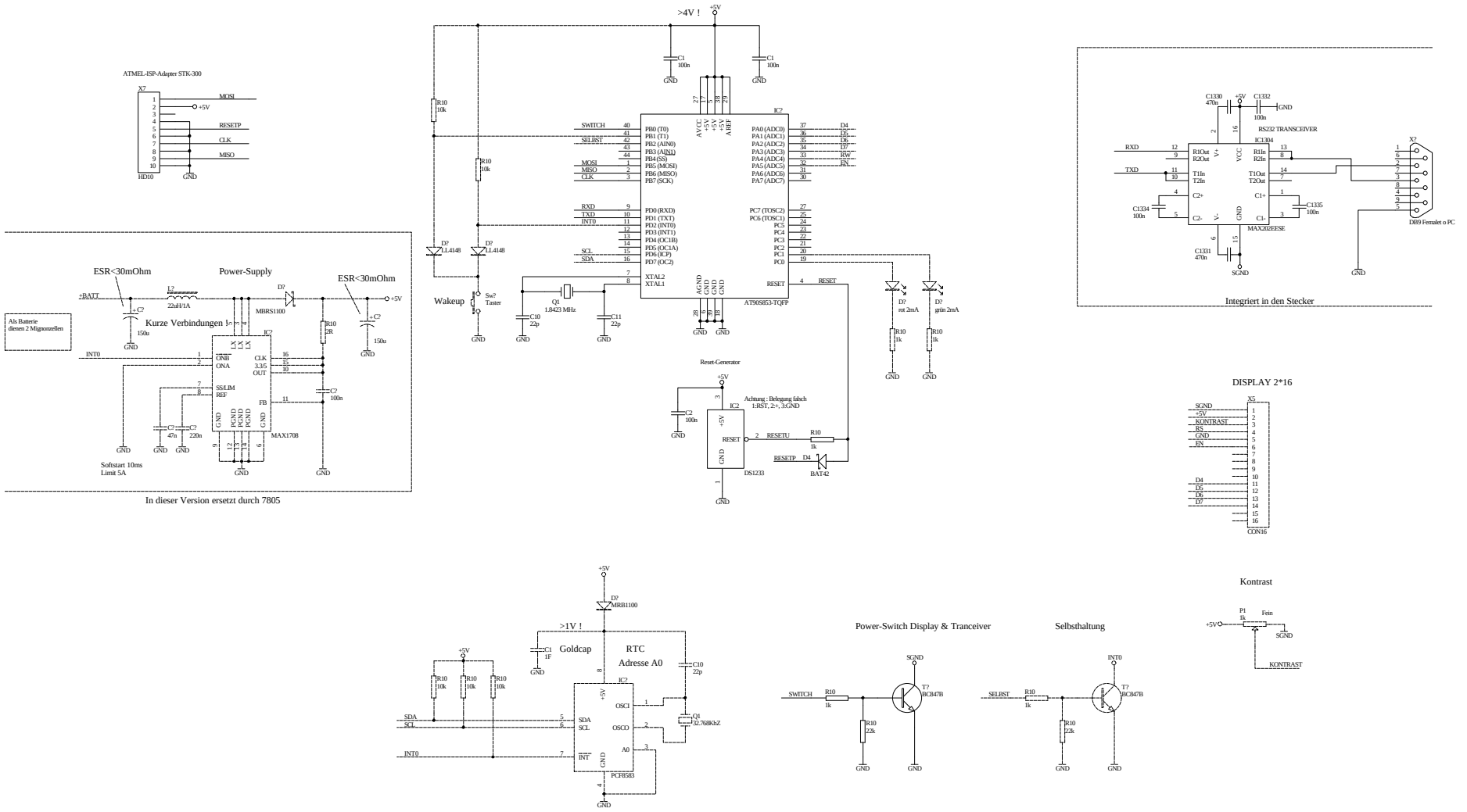

(C) Finger 2002

Title	Muell-O-Mat		
Size: A2	Number:	Revision:	
Date: 27-Dec-2002	Time: 19:41:31	Sheet 0 of 0	
File: D:\Daten\bunker\cd29\Projekte\Muell-O-Mat\Hardware\muell.ddb - Documents\Muell.Sch			