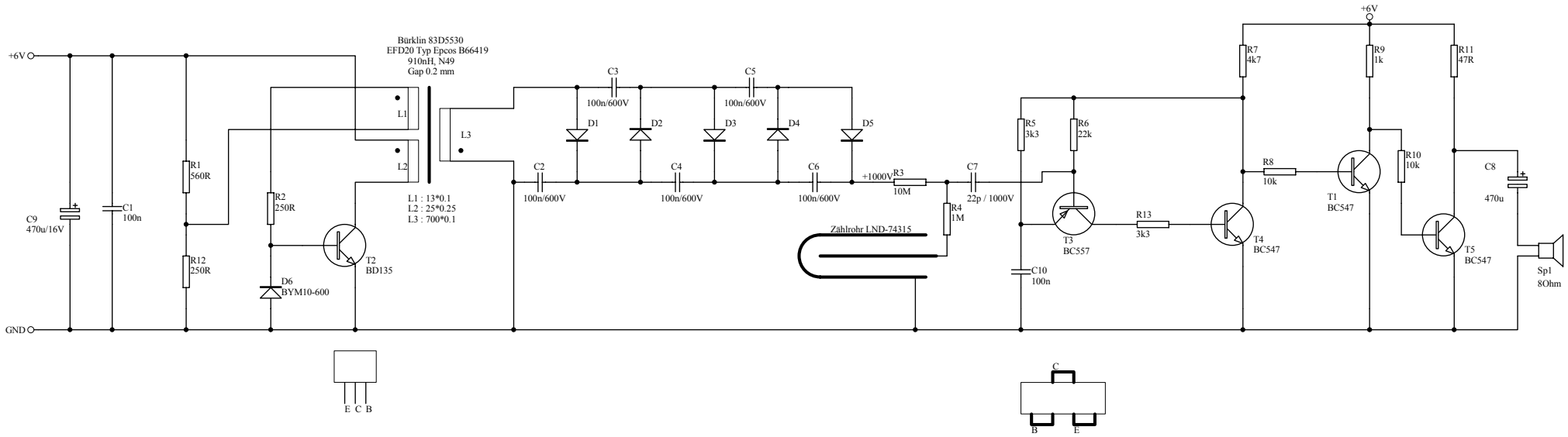

Title *Fingers Geigerzähler*			*Protel International P/L*
Size: A3	Number:	Revision:	
Date: 3-Oct-2005	Time: 20:53:50	Sheet1 of 1	
File: C:\DOKUME~1\ADMINI~1\LOKALE~1\Temp\geiger.Ddb - Documents\geiger.sch			

Protel
Making Electronic Design Easy™