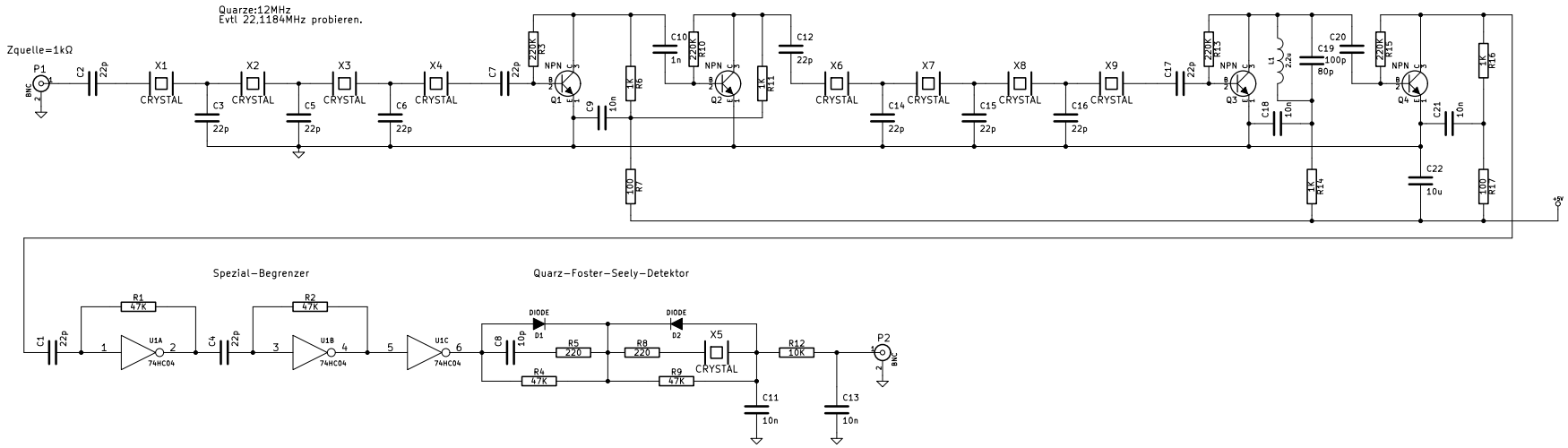

File: cb12mhz.sch		
Sheet: /		
Title:		
Size: A3	**Date: 20 sep 2015**	**Rev:**
KiCad E.D.A.		Id: 1/1